Model PV-ACL-2

2-Way Accelerator Pilot

❑ Maintenance Instructions ❑ Installation ❑ Troubleshooting

Maintenance Instructions

MAINTENANCE (PV-ACL-2 VALVE)

The 2-Way Accelerator Pilot may be installed in any position. The valve ports are labeled below.

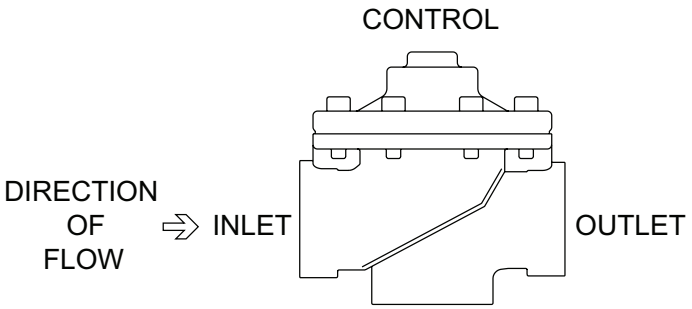

DISASSEMBLY

Prior to disassembly, relieve all pressure in pilot system and then remove the PV-ACL-2. Note the pilot connections and reinstall the pilot with the same connection placement when finished with maintenance.

1. Remove 8 socket head screws around the pilot bell using a 5/32” hex key and the spring.
2. Use a hex key for the bottom screw on the plunger/diaphragm assembly and a 12mm socket or adjustable wrench on the diaphragm nut to disassemble the plunger/diaphragm assembly.

3. Disassemble the diaphragm/plunger assembly. There should be a nut, lock washer, large washer, diaphragm, o-ring, plunger, and screw from the diaphragm assembly.

4. After complete disassembly, thoroughly clean and inspect all components before reassembly. Replace any parts as necessary after inspection.

5. The pilot seat generally does not need to be removed, but if after inspection it requires replacement it can be removed with a 1-1/16” socket.

PV-ACL-2 VALVE

REASSEMBLY

Reassembly of the PV-ACL-2 is the reverse of disassembly.

1. Install the plunger, o-ring, diaphragm, large washer, lock washer and nut in order on the plunger screw and tighten.

2. Next place the diaphragm assembly into body with the plunger on the seat.

3. Install spring on top of the diaphragm assembly and pilot bell on the valve body.

4. Insert socket head cap screws into pilot bell holes and thread into valve body. Tighten all screws in a cross pattern.

5. Reinstall into the pilot system once maintenance is completed. For further assistance or ordering replacement parts go to www.zurn.com or call product support 877-222-5356.

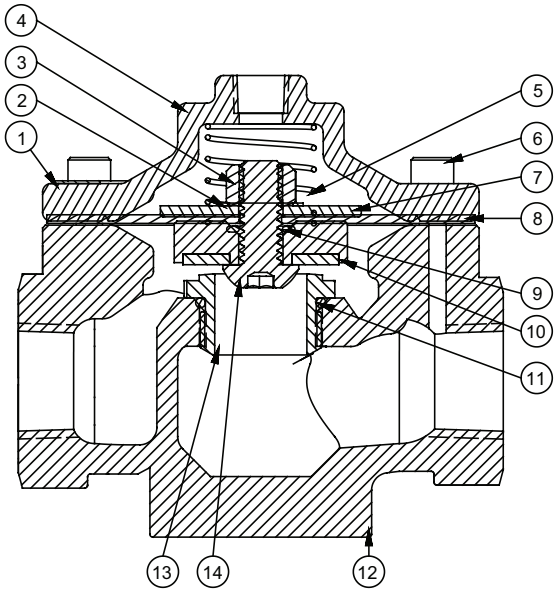

ITEM	DESCRIPTION
1	TAG, ACCELERATOR PILOT
2	5/16" INT TEETH LOCKWASHER
3	5/16-18 DIAPHRAGM NUT
4	ACL BELL
5	ACL STEM SPRING
6	10-32x5/8 SKT HEAD CAP SCREW
7	PILOT DIAPHRAGM WASHER

ITEM	DESCRIPTION
8	DIAPHRAGM
9	DIAPHRAGM O-RING
10	PLUNGER ASSY.
11	O-RING
12	BODY
13	PILOT SEAT
14	5/16-18X3/4 BUTTON HEAD CAP SCREW

PV-ACL-2 SPECS

Max Inlet Pressure: 400 psi

ZURN WILKINS

1747 Commerce Way, Paso Robles, CA 93446 Phone:855-663-9876 Fax:805-238-5766

www.zurn.com

Troubleshooting

PROBLEM	POSSIBLE CAUSES	CORRECTIVE ACTION
1. ACL does not open	1. The spring is over compressed	1. Disassemble and remove obstruction
	2. Foreign matter obstruction between diaphragm assy. and bell	2. Disassemble and remove obstruction, replace parts as necessary
	3. Damaged diaphragm or plunger screw o-ring	3. Disassemble and replace diaphragm or o-ring
	4. ACL bell port is clogged	4. Remove obstruction
2. ACL does not close	1. Weak or no spring compression	1. Check and replace spring as needed
	2. Foreign matter between plunger and seat	2. Disassemble and remove obstruction
	3. Damaged plunger, seat or seat o-ring	3. Remove and replace parts as needed
	4. ACL bell port is clogged	4. Remove obstruction
3. Leakage from valve	1. Damaged diaphragm	1. Disassemble and replace damaged part as needed
	2. Ports not sealed	2. Remove and reinstall port fittings with Teflon tape or pipe sealant

NOTICE: Annual inspection and maintenance is required of all plumbing system components. To ensure proper performance and maximum life, this product must be subject to regular inspection, testing and cleaning.

WARRANTY: ZURN WILKINS Valves are guaranteed against defects of material or workmanship when used for the services recommended. If in any recommended service, a defect develops due to material or workmanship, and the device is returned, freight prepaid, to ZURN WILKINS within 12 months from date of purchase, it will be repaired or replaced free of charge. ZURN WILKINS' liability shall be limited to our agreement to repair or replace the valve only.

WARNING: This product contains a chemical known to the State of California to cause cancer, birth defects and other reproductive harm
ADVERTENCIA: Este producto contiene una sustancia química que el Estado de California como causante de cáncer, defectos de nacimiento y otros daños reproductivos